Department Of Computer Application (BCA)
Dr. Rakesh Ranjan

BCA Sem - 2
Computer Organization and Architecture

Shift registers

Shift registers are a type of sequential logic circuit, mainly for storage of digital data. They are a group of flip-flops connected in a chain so that the output from one flip-flop becomes the input of the next flip-flop. Most of the registers possess no characteristic internal sequence of states. All flip-flop is driven by a common clock, and all are set or reset simultaneously.
the basic types of shift registers are studied, such as

Serial In - Serial Out,
Serial In - Parallel Out,
Parallel In – Serial Out,
Parallel In - Parallel Out,
bidirectional shift registers.
A special form of counter - the shift register counter, is also introduced.

Register:

1. A set of n flip-flops
2. Each flip-flop stores one bit
3. Two basic functions: data storage and data movement

Shift Register:

1. A register that allows each of the flip-flops to pass the stored information to its adjacent neighbor

2. basic data movement in shift registers.

Counter:

A register that goes through a predetermined sequence of states

FIGURE 10–2 Basic data movement in shift registers (four bits are used for illustration).

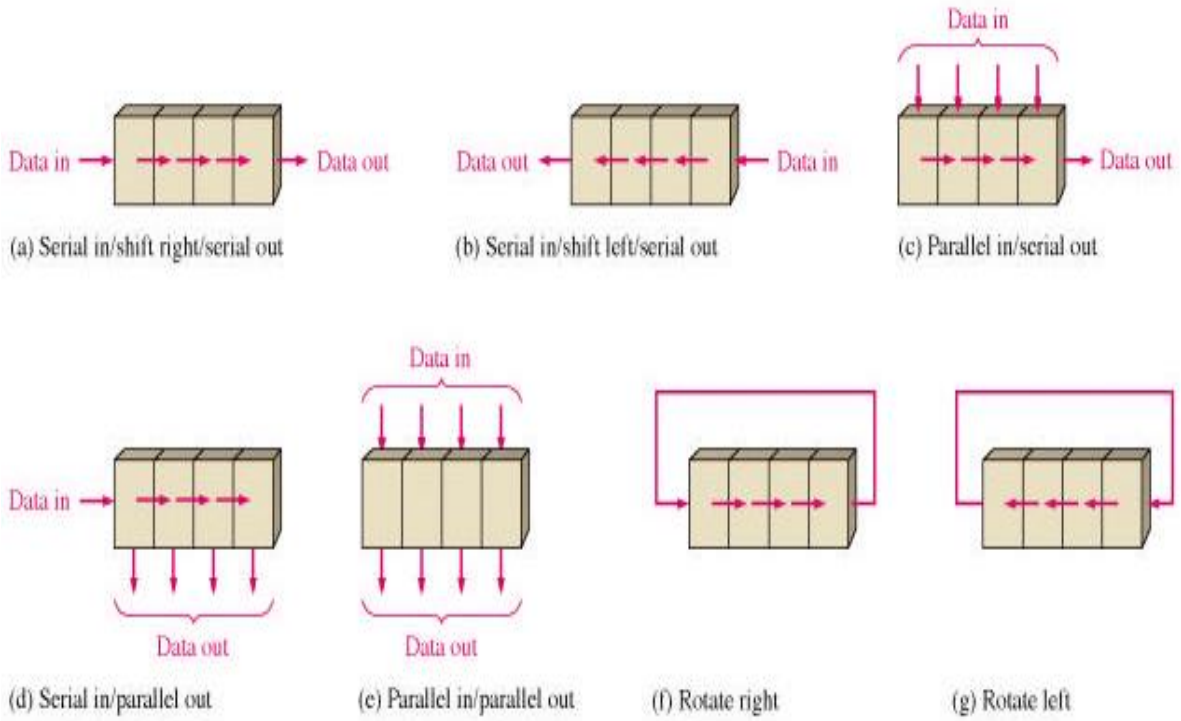

Storage Capacity:

storage capacity

The storage capacity of a register is the total number of bits (1 or 0) of
digital data it can retain. Each stage (flip flop) in a shift register represents one bit of storage capacity. Therefore the number of stages in a register determines its storage capacity.

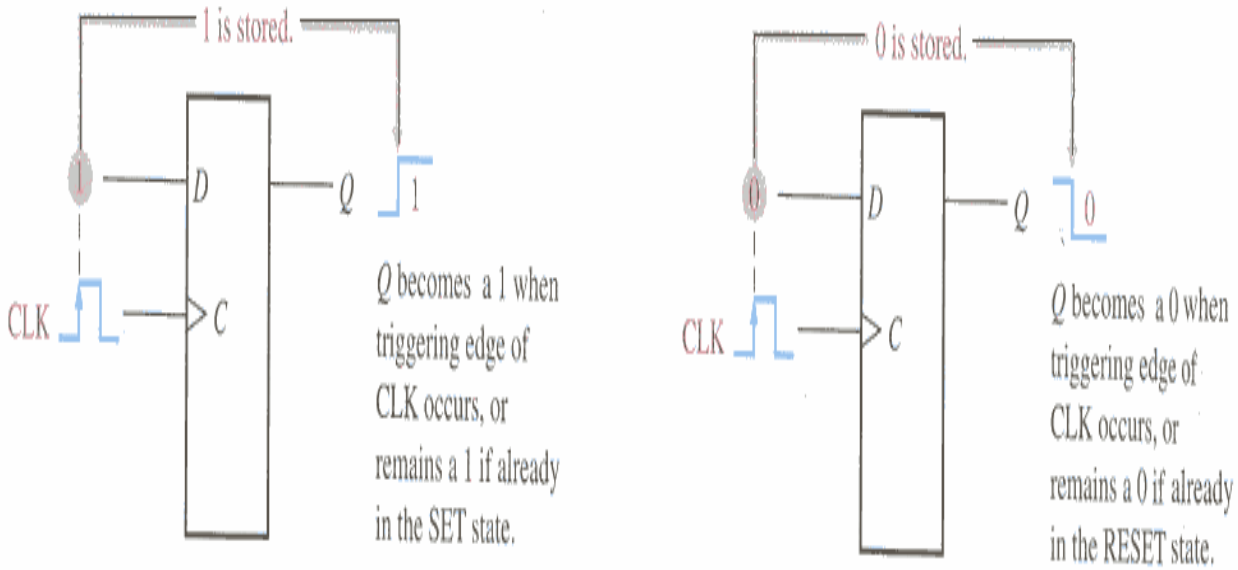

Serial In - Serial Out Shift Registers

The serial in/serial out shift register accepts data serially – that is, one bit
at a time on a single line. It produces the stored information on its output
also in serial form.

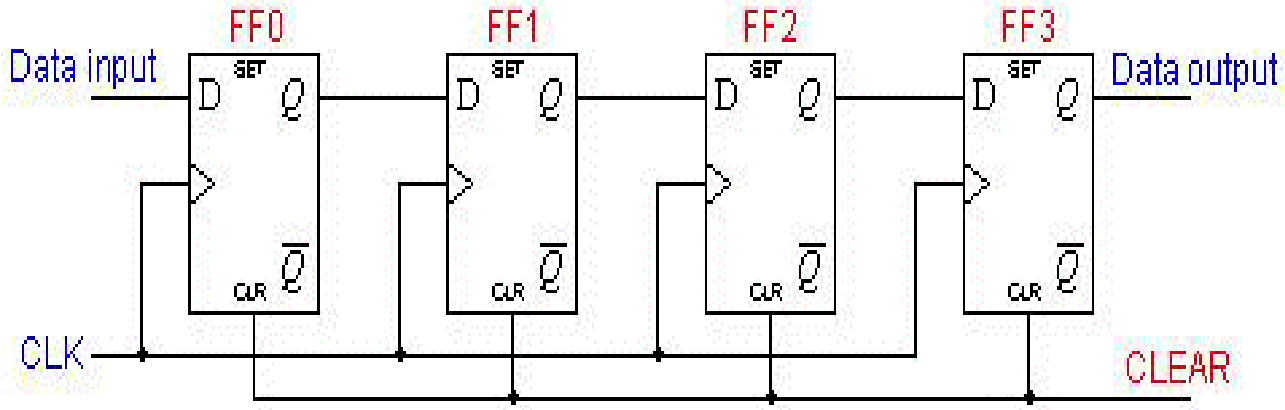

A basic four-bit shift register can be constructed using four D flip-flops, as shown in Figure

The operation of the circuit is as follows.

1. The register is first cleared, forcing all four outputs to zero.
2. The input data is then applied sequentially to the D input of the first flip-flop on the left (FF0).
3. During each clock pulse, one bit is transmitted from left to right.
4. Assume a data word to be 1001.
5. The least significant bit of the data has to be shifted through the register from FF0 to FF3.

In order to get the data out of the register, they must be shifted out serially. This can be done destructively or non-destructively. For destructive readout, the original data is lost and at the end of the read cycle, all flip-flops are reset to zero.

FF0	FF1	FF2	FF3	
0	0	0	0	1001

The data is loaded to the register when the control line is HIGH (ie WRITE). The data can be shifted out of the register when the control line is LOW (ie READ).

Input-output organizations- I/O Interface, Properties of simple I/O Devices and their controller

----------x----------